AC0C6-11
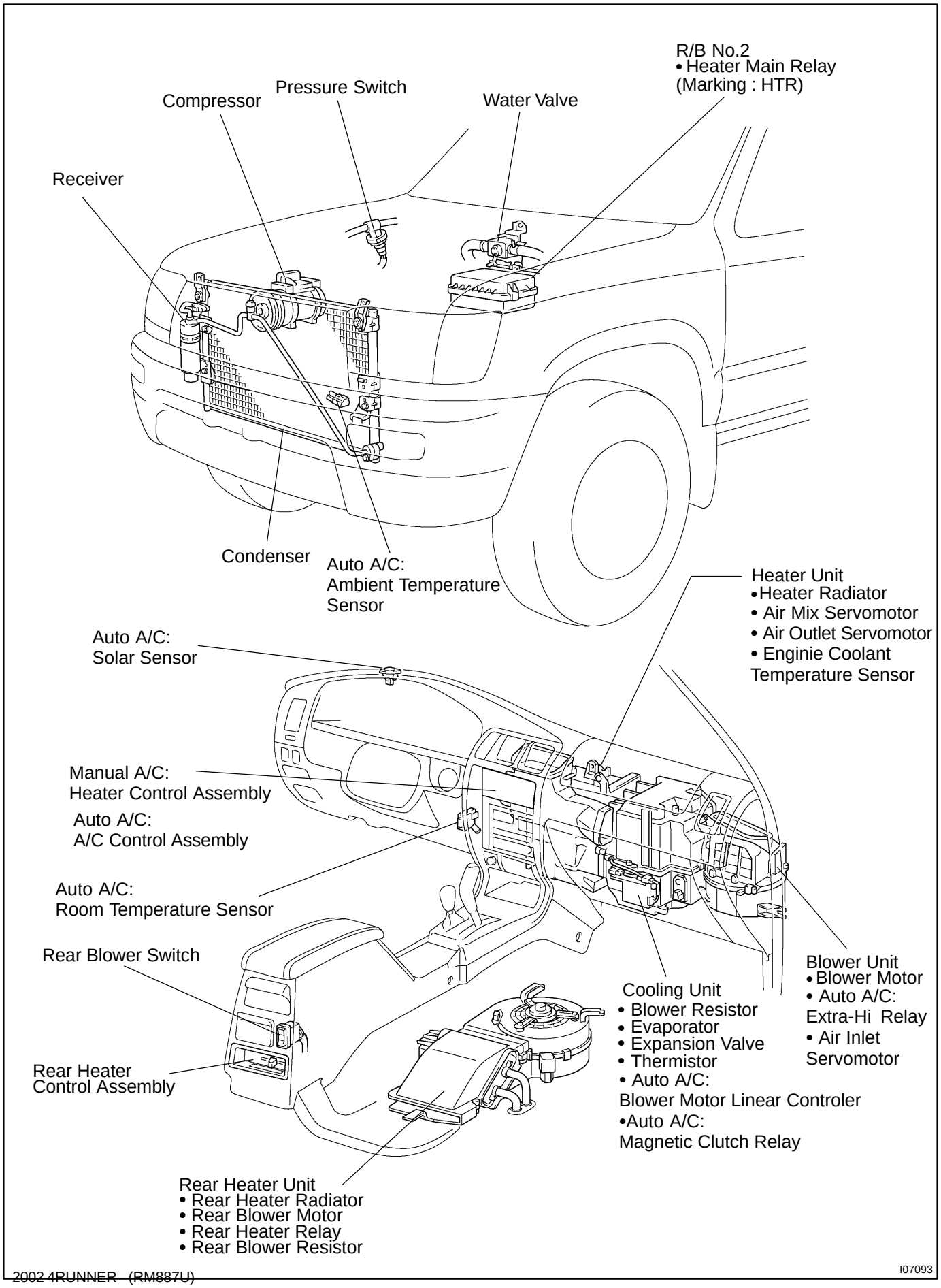
# LOCATION